# Offutt AFB Dormitory Analysis

## OPPD/NEO

## Technical Evaluation
## Final Report

**EXECUTIVE SUMMARY**

The objective of this study is to evaluate the most energy efficient Heating, Ventilation, and Air Conditioning (HVAC) system for dormitories at Offutt Air Force Base (AFB) that satisfies the new comfort guidelines set forth by the United States Air Force (USAF). A year-around computer simulation of Offutt AFB dormitory buildings 324, 364, and 365 was conducted to establish the baseline energy consumption of the existing systems. Three potential HVAC alternatives were evaluated and their energy consumption was compared to the existing system:

- Replace the existing boilers, chillers, and fan coil systems with geothermal heat pumps.
- Replace the existing boilers, chillers, and fan coil systems with water source heat pumps.
- Upgrade the boiler and chiller plant and convert all fan coils from a 2-pipe to a 4-pipe configuration.

Preliminary designs and equipment specifications are presented later in this report for each of the HVAC alternatives evaluated. Each alternative provides superior comfort levels over the existing system by allowing simultaneous heating and cooling and providing ventilation levels consistent with industry guidelines.

Analysis results indicate that geothermal heat pumps represent the most energy efficient alternative evaluated. This is primarily due to elimination of natural gas for heating, a reduction in energy associated with heat rejection equipment, and lower pumping requirements. The second most energy efficient alternative was the upgraded boiler/chiller plant, where improvements in equipment efficiency and variable speed pumping represented the energy savings over the existing equipment. Although an improvement over existing equipment, the least efficient alternative evaluated was the water source heat pumps. This was primarily due to the efficiency of the cooling compressors, which was the lowest of the equipment evaluated. A comparison of the annual energy consumption for each alternative is presented below.

| Scenario | Annual Energy Consumption | | |
|---|---|---|---|
| | Electricity (kWh) | Natural Gas (MCF) | Total Energy (MMBtu) |
| Baseline | 7,309,347 | 17,675 | 42,622 |
| Geothermal HP w/Elec DHW | 8,019,389 | 0 | 27,370 |
| Water Source HP w/Elec DHW | 9,244,647 | 2,432 | 33,984 |
| Upgrade Boiler/Chiller | 6,641,936 | 11,652 | 34,321 |

An additional report will be developed that will include 35% design documents for the most viable alternative.

**OBJECTIVE**

The objective of this study is to evaluate the most energy efficient HVAC system for dormitories at Offutt AFB that satisfies the new comfort guidelines set forth by the United States Air Force. Many of the existing dormitories at Offutt AFB are not designed to maintain year-around heating and cooling and are not energy efficient systems. A full year computer simulation of existing dormitory buildings was conducted to establish the baseline energy consumption of the existing systems as well as the energy consumption of several HVAC system alternatives. Dormitory buildings 364, 365, and 324 were chosen for study because they represent typical construction for Offutt AFB and are supported by a central heating and cooling plant. There were three HVAC alternatives evaluated:

- Replace the existing boilers, chillers, and fan coil systems with geothermal heat pumps.
- Replace the existing boilers, chillers, and fan coil systems with water source heat pumps.
- Upgrade the boiler and chiller plant and convert all fan coils from a 2-pipe to a 4-pipe configuration.

Improving the indoor air quality and comfort for residents of the dormitory is a requirement to satisfy new USAF comfort standards. The existing 2-pipe system does not allow simultaneous heating and cooling, which is problematic during the spring and fall months when some areas of the buildings might require cooling while others require heating. In addition, there is no central ventilation system in the dormitory buildings, and the only outside air introduced into the buildings is through open doors, windows, and infiltration. Each of the alternatives evaluated supported simultaneous heating and cooling, and provided ventilation at levels consistent with the American Society of Heating, Ventilation, and Air-Conditioning Engineers (ASHRAE) standard for dormitories.

An energy comparison for each of the alternatives evaluated is presented, and the results concluded for this study could be extrapolated to other buildings on the basis of similar construction.

This report focuses only on the relative energy consumption of each alternative evaluated. An additional report will be developed to include 35% design documents for the most viable alternative.

**EXISTING FACILITIES**

There were three dormitories chosen to be included in the study, Buildings 324, 364, and 365. Building 324 was constructed in 1961 and is attached to a dining hall that supports all three dormitories. Buildings 364 and 365 were constructed in 1987 and have identical floor plans. All three buildings have a concrete frame with brick envelope construction.

Buildings 364 and 365 each have a total of 73,500 square feet and 180 dormitory rooms that are heated and cooled with a 2-pipe fan coil system. There are also several fan coils units located in common areas such as corridors, lounges and offices. Each building has a single mechanical room on the first floor that has two 15 HP constant speed secondary pumps used to supply chilled water to the fan coils during the cooling season and hot water to the fan coils during the heating season. Steam from the central plant is supplied to a heat exchanger in the mechanical room for the production of hot water. Steam is also supplied to two 500-gallon domestic hot water heaters that support each building. There are no air-handling units in either building and the only outside air introduced into the buildings is through open doors, windows, and infiltration.

Building 324 has a total of 112,00 square and 282 dormitory rooms that are also heated and cooled with a 2-pipe fan coil system. In addition to the fan coil units there are also fin-tube baseboard radiators that provide supplemental heating to dormitory rooms. Additional fan coil units provide heating and cooling to the common areas. There are four identical mechanical rooms that each have four 2 HP constant speed secondary pumps for chilled and hot water and a 500-gallon domestic hot water heater to support the building. There are no air-handling units and the only outside air introduced into the buildings is through open doors, windows, and infiltration.

The dining hall is located in the middle of Building 324 and has a central, variable air volume air-handling unit with a capacity of 14,600 cubic feet per minute. Both the supply fan and return fan motors have a variable frequency drive. The central heating and cooling plant supports the hot and cold decks of the air-handling unit. There are seven exhaust fans to support hoods located in the kitchen area and an additional exhaust fan on the penthouse for relief air. There is also fin-tube baseboard radiators located along the perimeter of the solarium that extends along the west and south side of the dining hall. Process steam from the central plant is also provided to support kitchen equipment such as dishwashing equipment and steam kettles.

The central plant is located in the basement of Building 324, by the dining hall, and supports all three dormitories. One 400-ton Carrier centrifugal chiller and one 200-ton McQuay centrifugal chiller provide cooling capacity for the buildings. The Carrier chiller operates at a design efficiency of 0.85 kW/ton and the McQuay chiller operates at a design efficiency of 0.92 kW/ton. There are two 20 HP constant speed pumps that distribute chilled water to the dormitory secondary pumps. Two cooling towers provide heat rejection for the chillers and are supported by one 30 HP and one 25 HP constant speed condensate pumps. Heating capacity and domestic hot water consumption is provided by three 5200 MBH Titusville boilers.

Switchover between heating and cooling typically occurs around April 15 and switchover between cooling and heating typically occurs around October 15. The cooling plant is currently undersized and cannot support the cooling load of the three buildings and dining hall.

A schematic of the existing heating and cooling systems is shown in Figure 1.

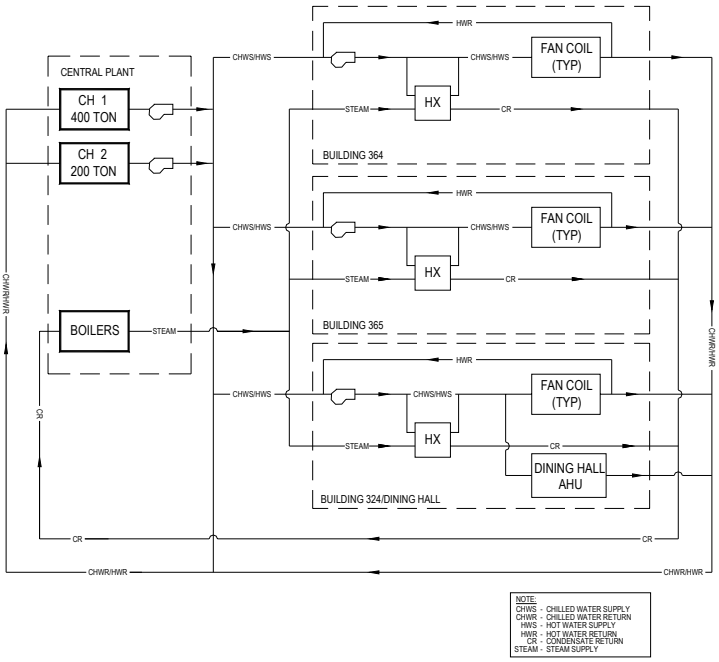


**Figure 1 – Schematic of Existing Heating and Cooling System**

**PROPOSED HVAC RETROFITS**

There are three proposed HVAC retrofits that were evaluated as part of the study. These alternatives are described in detail below:

***Alternative 1 - Geothermal Heat Pumps*.** This alternative is to replace the existing boilers, chillers, and cooling towers with geothermal heat pumps that would be located in each space served by the system. Each of the three buildings (364, 365, and 324 w/dining hall) would have a dedicated ground loop and two new loop pumps with variable speed drives installed in the mechanical room of each building. No auxiliary boiler would be required, as the heat pump units would include electric resistance heating to satisfy the heating load during extreme weather conditions. Two alternatives were evaluated for domestic hot water in each building: (1) electric resistance heaters or (2) high efficiency pulse boilers. A dedicated electric boiler would provide process steam for kitchen equipment in the dining hall. The existing 2-pipe plumbing configuration would be utilized with the new geothermal heat pumps. Ventilation requirements of 30 cfm/room (per ASHRAE 62 guidelines) were provided for buildings 324, 364, and 365. Figure 2 includes a schematic of the piping and general arrangement of the system.

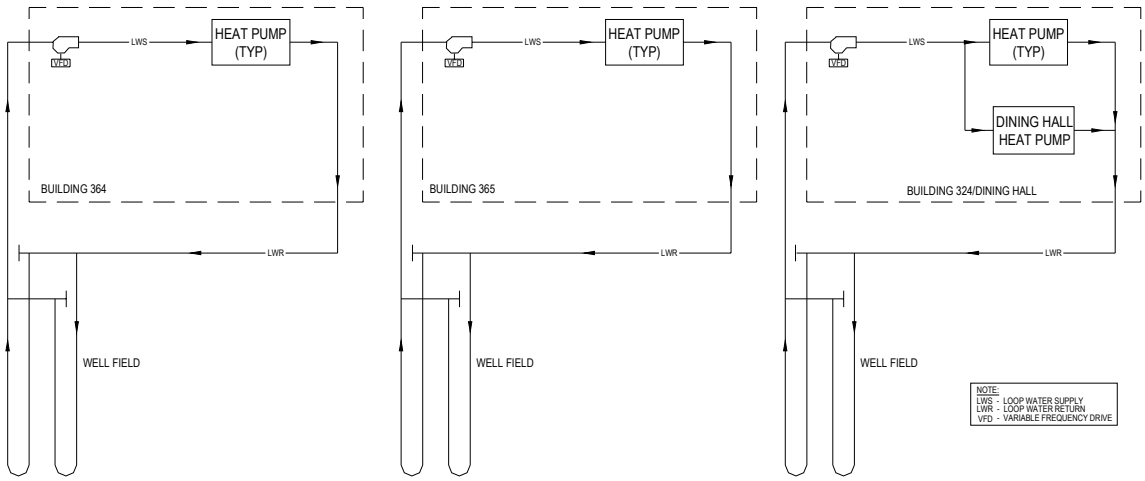


**Figure 2 – Schematic of Geothermal Heat Pump Alternative**

***Alternative 2 - Water Source Heat Pumps.*** This alternative is to replace the existing boilers, chillers, and cooling towers with water source heat pumps that would be located in each space served by the system. The existing cooling towers would be replaced with a fluid cooler, eliminating the condenser loop. The existing boilers would be replaced with high efficiency pulse boilers to provide auxiliary heating during extreme weather conditions. Two alternatives were evaluated for domestic hot water in each building: (1) electric resistance heaters or (2) high efficiency pulse boilers. All three buildings would be tied together in a single water loop with pulse boilers and pumps, similar to the existing water loop configuration. Two new constant speed primary water pumps would be provided in the central plant and two secondary water pumps with variable speed drives would be provided in each building for the water loop. A dedicated electric boiler would provide process steam for kitchen equipment. As with the geothermal heat pumps the existing 2-pipe plumbing configuration would be utilized. Ventilation requirements of 30 cfm/room (per ASHRAE 62 guidelines) were provided for buildings 324, 364, and 365. Figure 3 includes a schematic of the piping and general arrangement of the system.

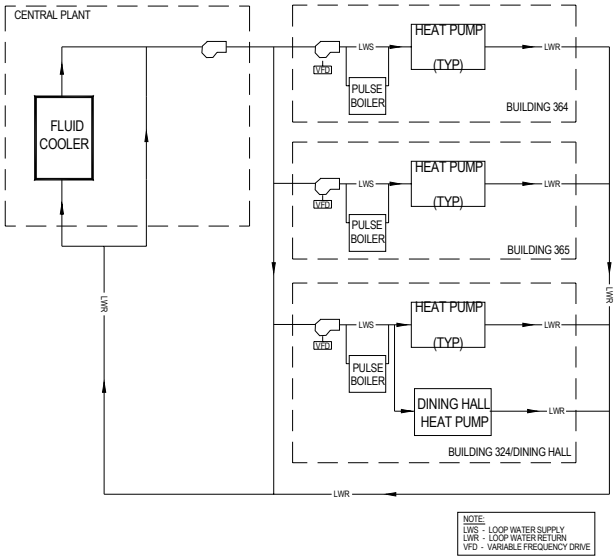


**Figure 3 – Schematic of Water Source Heat Pump Alternative**

***Alternative 3 - Upgrade Chiller and Boiler Plants***. This alternative is to upgrade the existing boiler and chiller plant with higher efficiency equipment. The existing chillers will be replaced with two 500-ton water-cooled centrifugal chillers. It will be necessary to convert the existing 2-pipe plumbing configuration to a 4-pipe system to support new fan coils and to satisfy Air Force comfort standards. The existing piping that supports all three buildings would be dedicated for the chilled water loop, and a separate hot water loop would be added to each building. The existing boilers would be replaced with new natural gas boilers and would provide steam to each of the three buildings. The existing configuration for domestic hot water and process steam for kitchen equipment would be utilized. Two new constant speed primary water pumps would be provided in the central plant and two secondary water pumps with variable speed drives would be provided in each building for the chilled water loop. Two variable speed primary pumps would be provided in each building for the hot water loop. Ventilation requirements of 30 cfm/room (per ASHRAE 62 guidelines) were provided for buildings 324, 364, and 365. Figure 4 includes a schematic of the piping and general arrangement of the system.

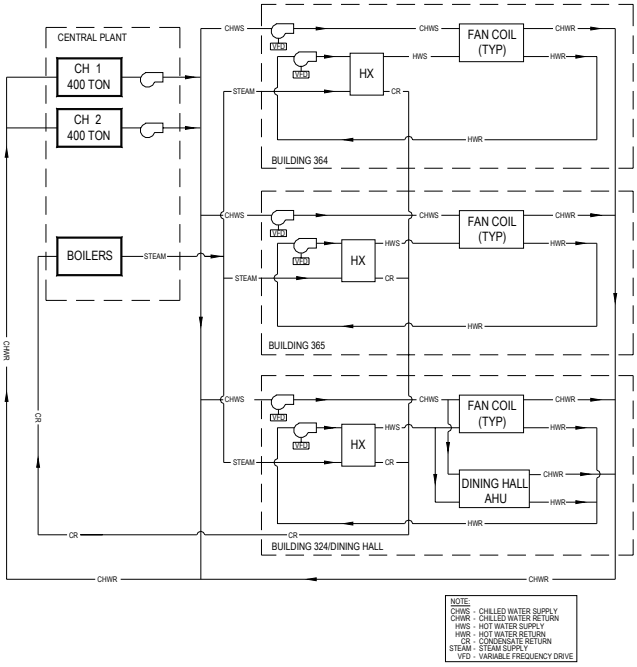


**Figure 4 – Schematic of Upgraded Central Plant and Chilled/Hot Water Loop**

**Table 1 – Comparison of Alternatives Modeled**

| Parameter | Existing | Alternative 1 – Geothermal Heat Pumps | Alternative 2- Water Source Heat Pumps | Alternative 3 – Upgrade chillers/boilers |
|---|---|---|---|---|
| Cooling | 1-400 ton Carrier (0.85 kW/ton)<br>1-200 ton McQuay (0.92 kW/ton) | Geothermal Heat Pumps<br>(0.83 kW/ton) | Vertical Water Source Heat Pumps<br>(1.08 kW/ton) | 2 – 500 ton centrifugal chillers<br>(0.57 kW/ton) |
| Heating | 3-Titusville boilers (5200 MBH input, 50% efficiency ) | Auxiliary electric strip heat with heat pumps | Auxiliary pulse boiler (90% efficiency) | 3- 5200 MBH input (83.0% efficiency) |
| Primary pumps | 1-20 HP const<br>1-20 HP const | 2-10 HP w/VFD (364)<br>2-10 HP w/VFD (365)<br>2-20 HP w/VFD (324) | 1-30 HP const<br>1-30 HP const | 1-30 HP const<br>1-30 HP const |
| Secondary pumps | 2-15 HP const (364)<br>2-15 HP const (365)<br>16-2HP const (324) | N/A | 2-5 HP w/VFD (364)<br>2-5 HP w/VFD (365)<br>2-10 HP w/VFD (324) | 2-20 HP w/VFD (364)<br>2-20 HP w/VFD (365)<br>2-25 HP w/VFD (324) |
| Condenser pumps | 1-25 HP const<br>1-30 HP const | N/A | N/A | 1-30 HP w/VFD<br>1-30 HP w/VFD |
| Domestic Hot Water | Steam from central plant to HX in each building | Electric resistance in each building<br>-OR-<br>Pulse boiler in each building | Electric resistance in each building<br>-OR-<br>Pulse boiler in each building | Steam from central plant to HX in each building |
| Process steam for kitchen | Steam from central plant | Electric boiler | Electric boiler | Steam from central plant |
| Ventilation | No ventilation for 324, 364, or 365.<br>20 cfm/person for dining hall. | 30 cfm/room ventilation for 324, 364, and 365.<br>20 cfm/person for dining hall. | 30 cfm/room ventilation for 324, 364, and 365.<br>20 cfm/person for dining hall. | 30 cfm/room ventilation for 324, 364, and 365.<br>20 cfm/person for dining hall. |

## ANALYSIS RESULTS

A computer-based simulation of the dormitories was conducted using Trane Trace 700, an energy simulation program. Drawings of each of the buildings being modeled were collected and an on-site survey of the building and mechanical rooms was conducted. Definitions of building shape, size, construction, occupancy, lighting, temperatures, schedules, controls, plug load, weather locale and other details were used to generate the model. Maintenance personnel were interviewed to understand operating procedures and existing limitations of the system. The program then simulated the energy use of the facility over a one-year analysis period, taking into account the changing effects of weather, schedule variances, etc.

The baseline model was calibrated to match historical energy usage numbers. The dormitory buildings are not individually metered so there are no baseline electricity consumption values for comparison. However, daily boiler logs of the natural gas heat input and output to the boilers are available and have been compiled into monthly natural gas consumption for 2000 and 2001.

The baseline model predicted a load of about 750 tons cooling load, well beyond the installed capacity of 600 tons in the central plant. This is consistent with statements from maintenance personnel, who indicate that the cooling load cannot be satisfied when the ambient temperature rises above 80 degrees F. Table 2 indicates the baseline cooling load and heating loads for each of the buildings modeled.

| Building | Cooling Load (tons) | Heating Load (MMBtu/h) |
|---|---|---|
| 364 | 168 | 1.645 |
| 365 | 169 | 1.645 |
| 324 | 277 | 2.455 |
| Dining Hall | 134 | 0.360 |
| **Total** | **749** | **7.383** |

**Table 2 – Baseline Heating and Cooling Loads**

Once the model was calibrated the proposed HVAC retrofit alternatives were modeled so that a side-by-side energy consumption analysis could be performed.

The energy simulation indicates that geothermal heat pumps represent the most viable energy alternative. This is primarily due to the displacement of natural gas for heating, energy savings associated with lowered pumping requirements, and the absence of energy consumption for heat rejection equipment, as shown in Table 3. Although the efficiency of the geothermal heat pumps was very close to the existing chillers, the ability to exchange heat in the water loop resulted in an overall reduction in the amount of compressor energy required to cool the buildings. There were two alternatives evaluated for domestic hot water and process steam production: electrical resistance or high efficiency pulse boilers. As can be observed in Table 3 the total energy consumption was less when using electric resistance for domestic hot water heating instead of the pulse boilers, due to the losses associated with burning natural gas.

Upgrading the existing equipment was the second most energy efficient alternative. The improved efficiencies of the new chillers, boilers, and variable speed pumping equipment attributed to the energy savings over existing equipment. This alternative would require conversion of the existing 2-pipe fan coil system to a 4-pipe fan coil system to support simultaneous heating and cooling requirements.

Although an improvement over the existing equipment, water source heat pumps proved to be the least energy efficient alternative evaluated. The efficiency of the water source heat pumps was the lowest of the alternatives evaluated, as can be noted by the largest amount of energy required for the cooling compressors. The pumping requirements were also lower than the existing equipment, but were higher than geothermal heat pumps. It should be noted that the natural gas consumption for auxiliary heating (e.g. pulse boilers) exceeded the baseline natural gas consumption used for primary heating. This is due to an extended heating season that is not possible with the 2-pipe system and a switchover date between heating and cooling seasons. As with the geothermal heat pumps, there are two cases evaluated for domestic hot water and process steam production, and similar results can be seen in Table 3.

| | Baseline | Geothermal HP w/Elec DHW | Geothermal HP w/Nat Gas DHW | Water Source HP w/Elec DHW | Water Source HP w/Nat Gas DHW | Upgrade Boiler/Chiller |
|---|---|---|---|---|---|---|
| **Electricity, kWh/year** | | | | | | |
| Primary Heating | 0 | 231,009 | 230,995 | 249,766 | 249,753 | 0 |
| Cooling Compressor | 1,327,065 | 950,594 | 950,594 | 1,728,424 | 1,728,424 | 947,295 |
| Cooling Tower, Condenser, Acc. | 676,606 | 219 | 219 | 174,185 | 174,185 | 434,463 |
| Circ Pumps, Supply Fans, Aux. | 513,246 | 39,629 | 39,629 | 294,334 | 294,334 | 467,747 |
| Lighting | 2,559,358 | 2,559,358 | 2,559,358 | 2,559,358 | 2,559,358 | 2,559,358 |
| Miscellaneous Equipment | 2,233,072 | 2,233,072 | 2,233,072 | 2,233,072 | 2,233,072 | 2,233,072 |
| Domestic HW/Process Stm | 0 | 2,005,509 | 0 | 2,005,509 | 0 | 0 |
| **Total kWh** | **7,309,347** | **8,019,389** | **6,013,867** | **9,244,647** | **7,239,125** | **6,641,936** |
| | | | | | | |
| **Natural Gas, MCF/year** | | | | | | |
| Primary Heating | 3,288 | 0 | 0 | 2,432 | 2,432 | 2,985 |
| Domestic HW/Process Stm | 14,387 | 0 | 9,043 | 0 | 9,043 | 8,667 |
| **Total MCF** | **17,675** | **0** | **9,043** | **2,432** | **11,476** | **11,652** |
| | | | | | | |
| **Total Energy, MMBtu/year** | **42,622** | **27,370** | **29,569** | **33,984** | **36,183** | **34,321** |
| **Total Energy, Btu/ft^2** | **154,799** | **99,406** | **107,390** | **123,428** | **131,412** | **124,649** |
| | | | | | | |
| **Design Cooling Load, tons** | **749** | **826** | **826** | **826** | **826** | **824** |
| **Design Heating Load, MMBtu/h** | **7.383** | **8.671** | **8.671** | **8.671** | **8.671** | **8.645** |

**Table 3 – Comparison of Performance Results for Each Alternative**

There are several points that need to be considered when reviewing the performance results. First, the design cooling load for the buildings modeled was over 825 tons, or about 37% higher than current capacity of the cooling equipment. The equipment associated with each alternative evaluated was sized to satisfy the cooling load, and consequently, will represent the amount of energy required to keep the facilities at acceptable comfort levels. Second, each of the alternatives evaluated supported simultaneous heating and cooling, something that is not possible with the existing 2-pipe system. Both of these considerations were captured in the energy simulation and are reflected in the results.

The capital costs required to implement each of these systems was not considered for this report. This will obviously have a significant impact of the overall economic viability of each alternative evaluated.